prs-1,2,5

the pacesetter in quality prefab roof products

the pate company
245 eisenhower lane south • lombard, illinois 60148
630.705.1920 • 800.243.3018 • fax 630.705.1930
www.patecurbs.com • e-mail: sales@patecurbs.com

pate
heavy duty pipe roller support

standard construction

Equipment support from heavy ga. Galvanized steel, continuous welded corner seams, 2 x 4 treated wood nailer, heavy ga. Galvanized steel counter-flashing with galvanized steel channel track attached. Roller assembly consists of galvanized steel channel track, galvanized steel fittings, washers and nuts and painted cast iron roller. Assembly permits both vertical and horizontal adjustment according to the chart below.

Customer:

PO:

Project:

Address:

Address:

Notes:

pate heavy duty pipe roller supports

pipe size	rac #	a	b	c	d
1" - 1 1/2"	rac-150	6"	12"	4 1/4"	13"
2" - 3 1/2"	rac-350	7"	11"	5 1/4"	9 1/2"
4" -6"	rac-600	9"	9"	7 1/4"	7 1/2"
8" - 10"	rac-1000	13 3/4"	10 1/4"	11 7/8"	2"
12"	rac-1200	15 3/4"	8 1/4"	13 7/8"	4 1/2"
14"	rac-1400	17 3/4"	6 1/4"	15 7/8"	3 1/4"
16"	rac-1600	19 3/4"	10 1/4"	17 7/8"	6 1/4"
18"	rac-1800	21 3/4"	8 1/4"	19 7/8"	4 1/4"
20"	rac-2000	23 3/4"	6 1/4"	21 7/8"	2"

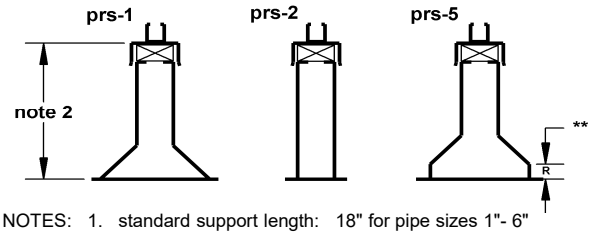

NOTES:
1. standard support length: 18" for pipe sizes 1"- 6"
   24" for pipe sizes 8" - 14"
   30" for pipe sizes 16" - 20"
2. standard support height: prs-1 = 8"
   prs-2 = 12"
   prs-5 = 9 1/2" (R = 1 1/2")
3. rac = roller assembly complete

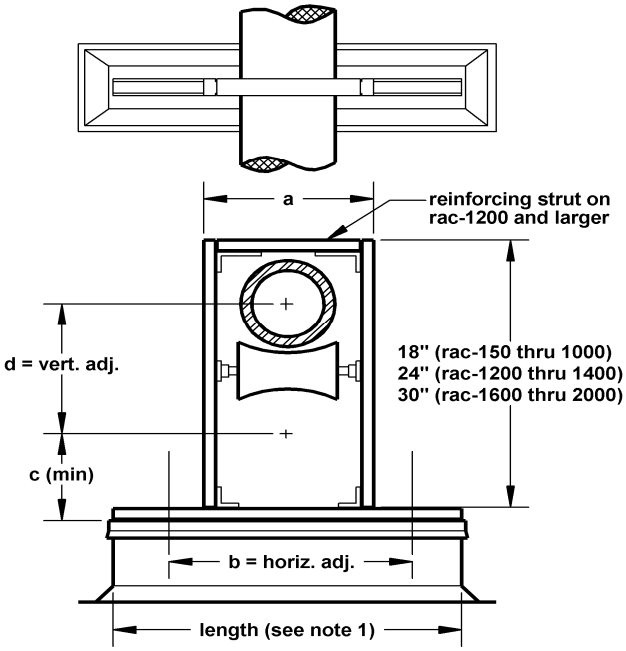

IMPORTANT: All fasteners must be torqued to 40 ft./lbs.

pipe roller support requirements

quantity	prs style	rac #	support length (see note 1)	nailer width	support height (see note 2)	**raised cant height	tag