pc-2-sf

the pacesetter in quality prefab roof products

the pate company
245 eisenhower lane south • lombard, illinois 60148
630.705.1920 • 800.243.3018 • fax 630.705.1930
www.patecurbs.com • e-mail: sales@patecurbs.com

pate
self flashing curbs for pitched roofs

standard construction

Heavy ga. galvanized or galvalume steel, unitized construction, full mitered corners, all seams welded, 1 1/2" thick rigid fiberglass insulation, with 4" base flange. All curbs are internally reinforced in larger dimensions. Pressure treated wood nailer optional.

Customer:

PO:

Project:

Address:

Address:

Notes:

pate curbs

pc-2- sf

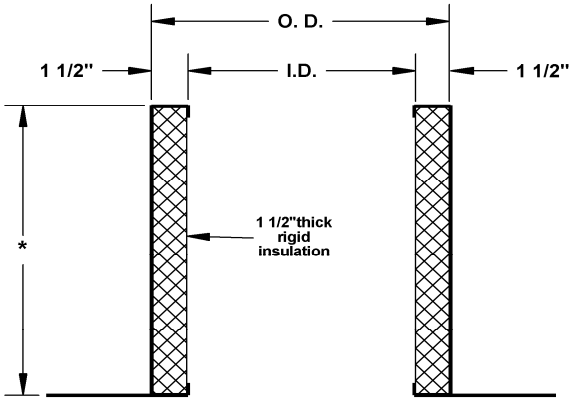

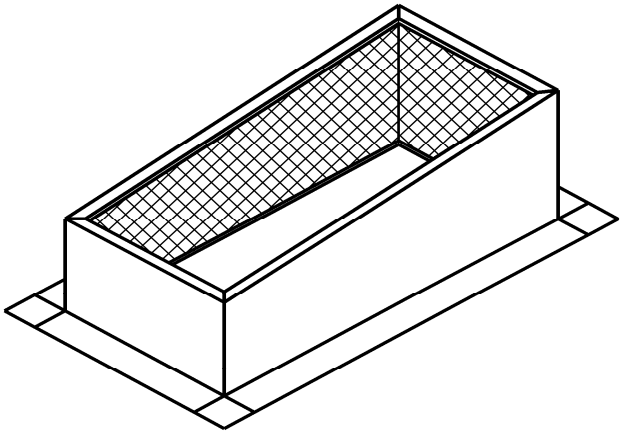

roof curb requirements

quantity	style	dimensions		* minimum height	roof slope	tag
		O.D.	I.D.			

©2006 the pate company