pc-fg

the pacesetter in quality prefab roof products

the pate company
245 eisenhower lane south • lombard, illinois 60148
630.705.1920 • 800.243.3018 • fax 630.705.1930
www.patecurbs.com • e-mail: sales@patecurbs.com

pate
foam gasket

standard construction

Closed cell vinyl nitrile / neoprene. Blended material with hi-tack pressure sensitive adhesive and release paper. Gasket is black in color, UL94 flame rated, with a serviceable temperature rating from -30 degrees to + 200 degrees Fahrenheit.

p.o. no. _____
customer _____
_____
project _____
location _____
_____
architect _____
engineer _____

pate foam gasket

pc-fg

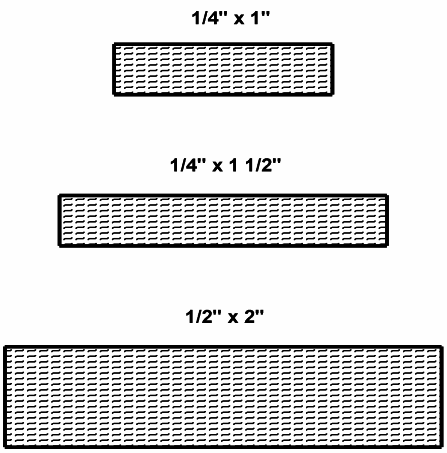

pc-fg applied to pate heavy duty AHU curb shown

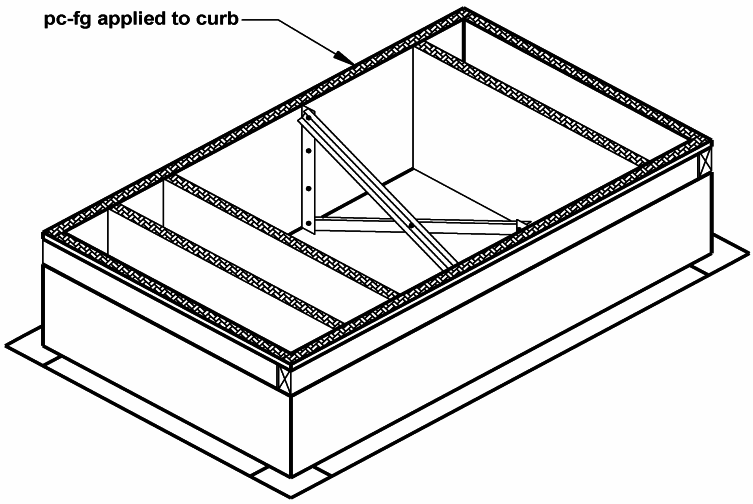

foam gasket requirements

quantity	rolls / cases	packaging	tag
		50 feet per roll **1/4" x 1" - 8 rolls per case (400 feet total)** **1/4" x 1 1/2" - 16 rolls per case (800 feet total)** **1/2" x 2" - 10 rolls per case (500 feet total)**	

©2006 the pate company