# pc-aceb

the pacesetter in quality prefab roof products

the pate company
245 eisenhower lane south • lombard, illinois 60148
630.705.1920 • 800.243.3018 • fax 630.705.1930
www.patecurbs.com • e-mail: sales@patecurbs.com

# pate
# curb extension box

## standard construction

Heavy ga. galvalume steel, unitized construction
with full mitered corners, all seams welded,
1 1/2" thick rigid fiberglass insulation.
All adapters reinforced in larger size dimensions.
Foam gasket supplied with adapter.

p.o. no. _____
customer _____
_____
project _____
location _____
_____
architect _____
engineer _____

## pate adapter

**pc-aceb**

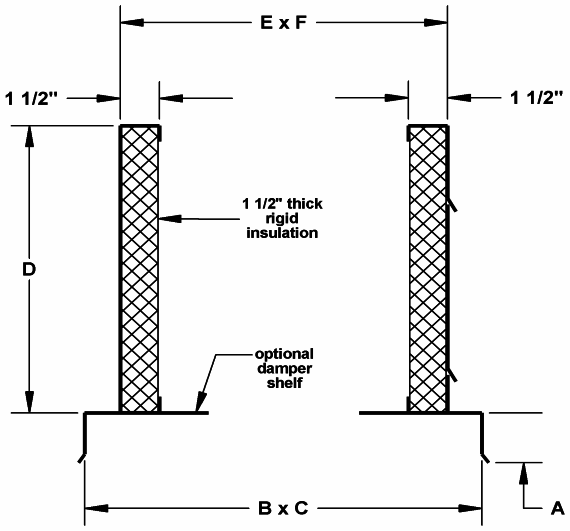


**pc-aceb with optional access door shown**

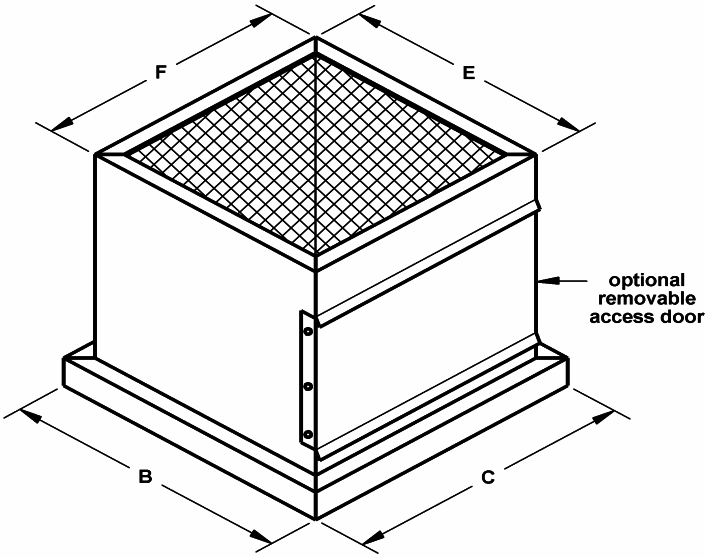


## adapter requirements

| quantity | tag | dimensions | | A | DHP I.D. | D | options |
|---|---|---|---|---|---|---|---|
| | | B x C | E x F | | | | |



©2006 the pate company